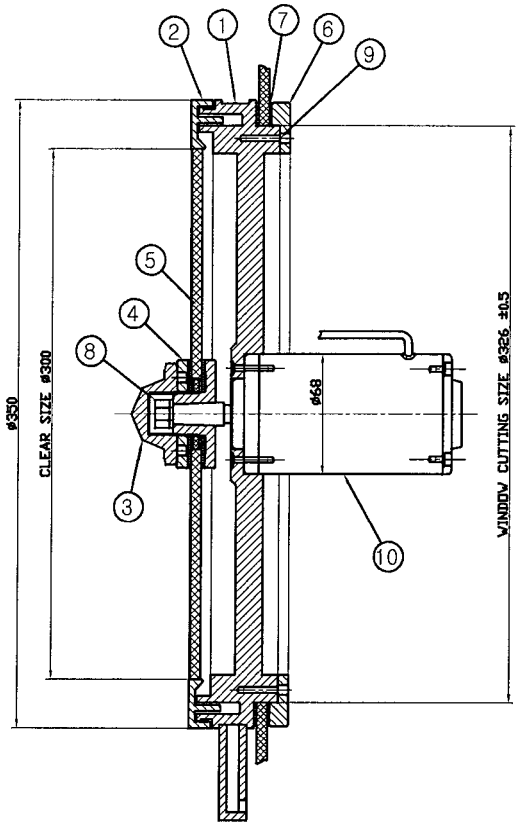

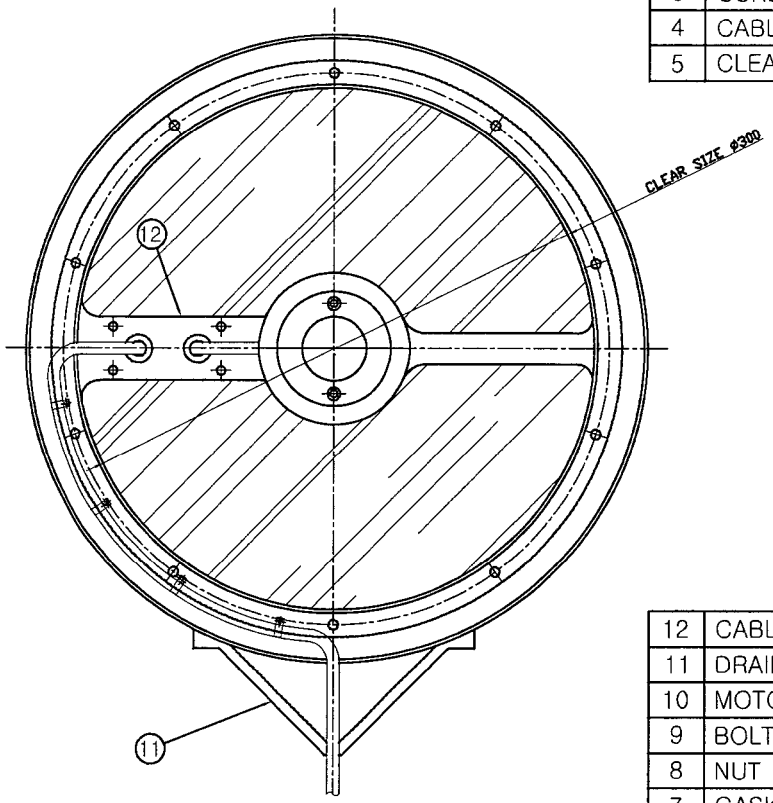

SPECIFICATION		
1	SUPPLY SOURCE	AC 110V/220V, DC 12V/24V
2	MOTOR OUTPUT	60 W
3	SCREEN REVOLUTION	1900 ± 200 RPM
4	CABLE CORD TYPE	KSC 3304
5	CLEAR SIZE	300ø

NO.	DESCRIPTION	MATERIAL	Q'TY	REMARK
12	CABLE COVER	AL. ALLOY	1	
11	DRAIN	AL. ALLOY	1	
10	MOTOR UNIT		1	
9	BOLT	SUS 304	10	
8	NUT	SUS 304	1	
7	GASKET	NEOPRENE	2	
6	FRAME KEEPER	AL. ALLOY	1	
5	SCREEN	TEMPERED GLASS	1	
4	SCREEN HOLDER	AL. ALLOY	1	
3	CAP NUT	AL. ALLOY	1	
2	SCREEN FLAME	AL. ALLOY	1	
1	MAIN FRAME	AL. ALLOY	1	

NOTE

1.FIXED WINDOW GLASS OUTING SIZE

'D'->326 ± 0.5 DIAMETER.

2.WHEN CLEAR VIEW SCREEN IS FIXED AT

FIXED WINDOW GLASS, REMOVE THE ATTACHED

VINYL OF 0.1~0.2T.

IF VINYL DON'T BE REMOVED, IT WILL BE CAUSED A LEAK.

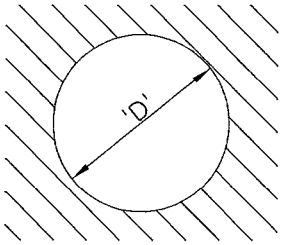

GLASS CUTTTING SIZE

APP. BY	H. J. LEE
CHK. BY	Y. H. LEE
DWG. BY	H. J. CHO
SCALE	1:4
DATE	2011.09.01
DWG NO.	

SUBJECT :
CLEAR VIEW SCREEN
WEATHER PROOF TYPE
(300ø)