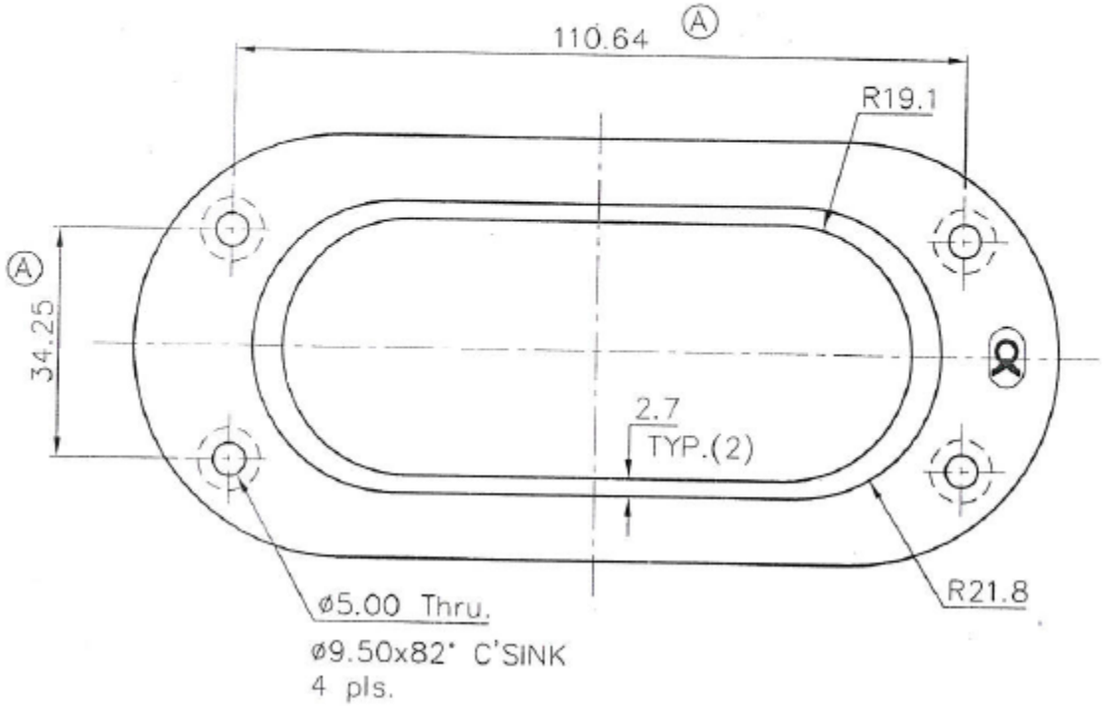

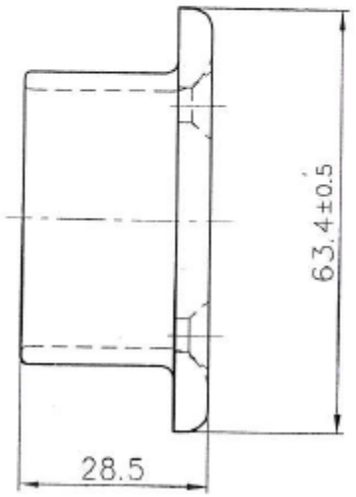

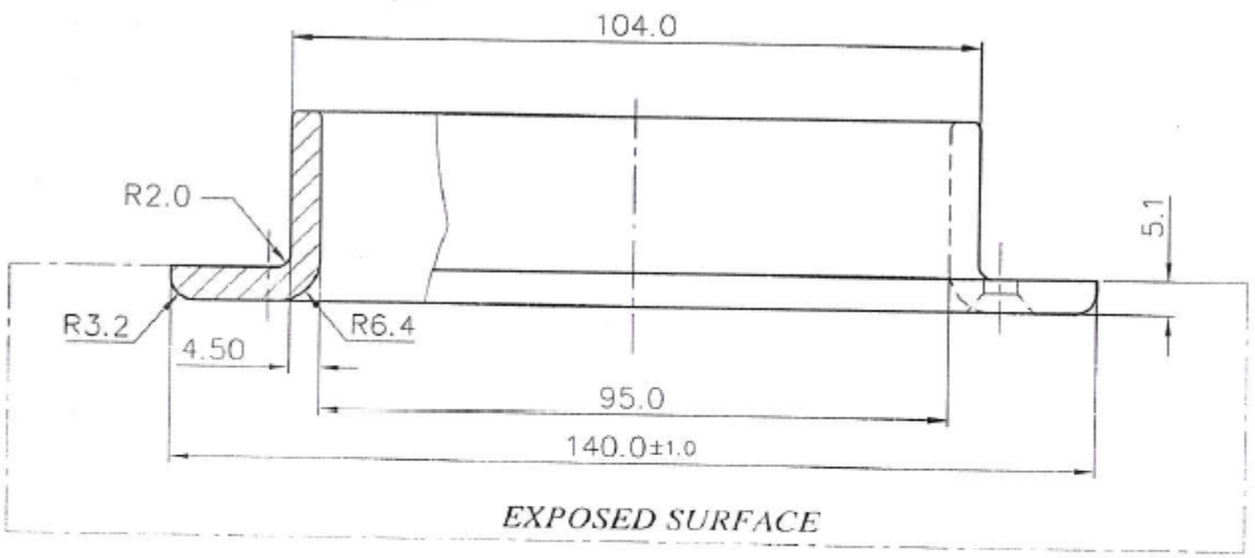

COPY

NOTE :

1. BREAK ALL SHARP EDGES
2. VIBRATION AND STEEL BALL
3. MIRROR POLISH FINISH ON EXPOSED SURFACE

TOLERANCE	
⊠ 0.X	± 0.25
⊠ 0.XX	± 0.13
⊠ 0.XXX	± 0.05
⊠ ANGULAR	± 0°30'

DRAWING BY : Pranee S.	TITLE :			
DATE : 03 FEB 1999				
CHECKED BY : Mor	CUSTOMER :			
DATE : 3/15/04				
APPROVED BY	REVISION	MOLD No.	MATERIAL	WEIGHT
DATE 3/15/04	A.2	237	316	
SCALE : N.T.S.	DWG. No. :			SHEET 1 : 1