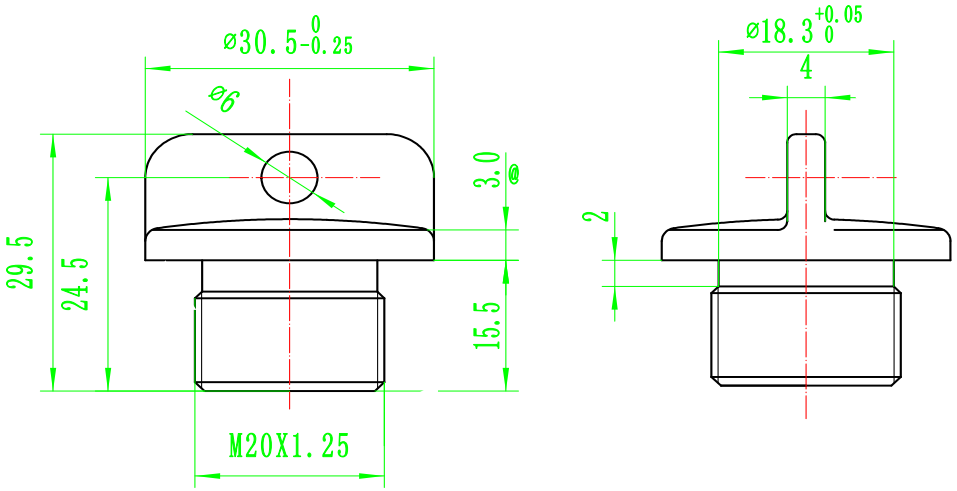
ø30.5 0 -0.25
ø6
29.5
24.5
3.0
15.5
M20X1.25
ø18.3 +0.05 0
4
2

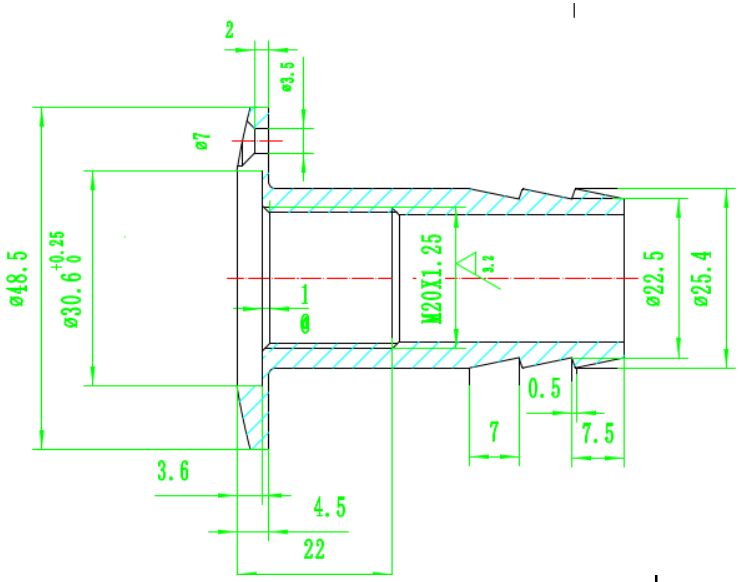
2
ø3.5
ø7
ø48.5
ø30.6 +0.25 0
1
M20X1.25
3.2
ø22.5
ø25.4
0.5
7
7.5
3.6
4.5
22

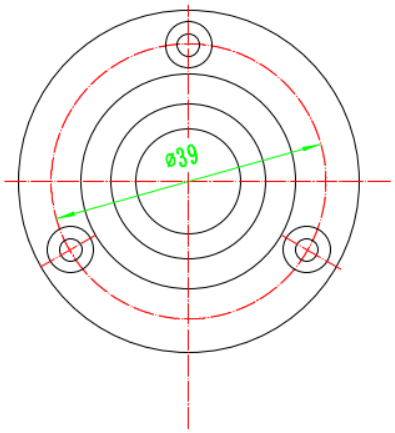
ø39

316

1834700